ZIBO CREATIVE
ZIBO CREATIVE INTERNATIONAL TRADE CO.LTD.

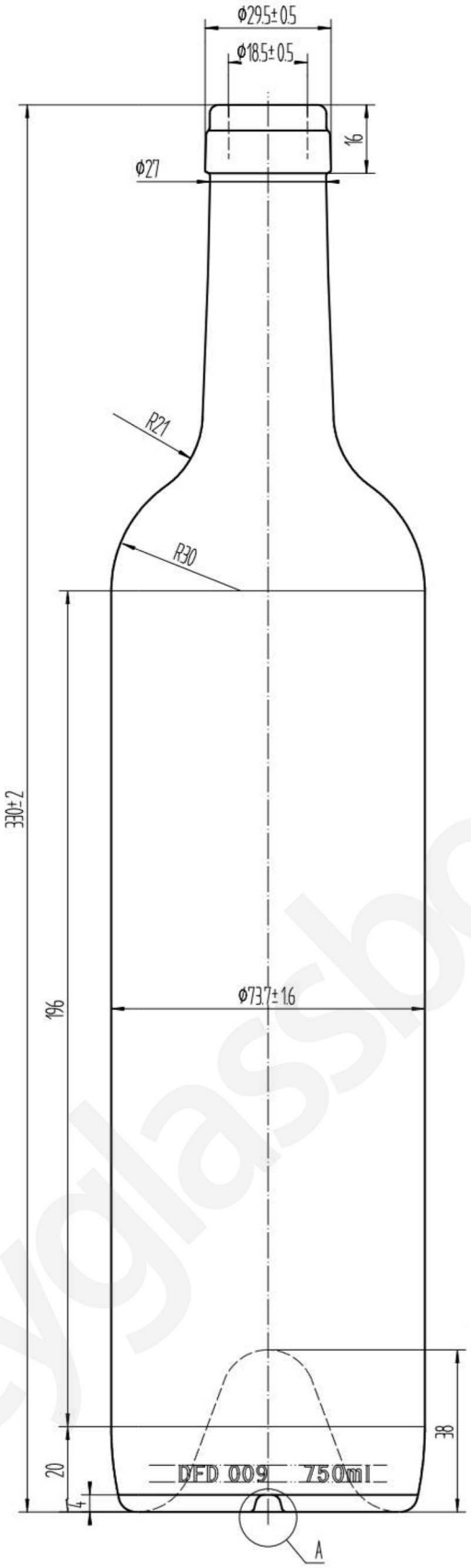

Name:	1744K
Style:	Bordeaux
Capacity:	750ml
Finish:	Standard cork
Color:	Antique green
Height:	330mm
Diameter:	73.7mm
Weight:	650g

cyglassbottle.com

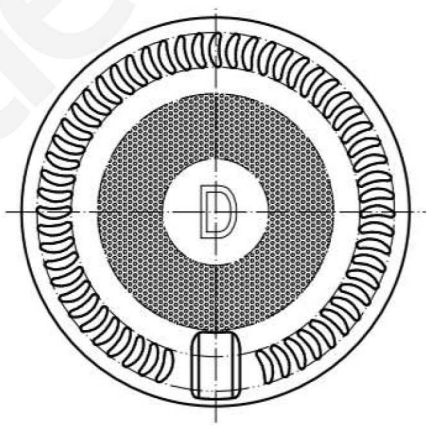

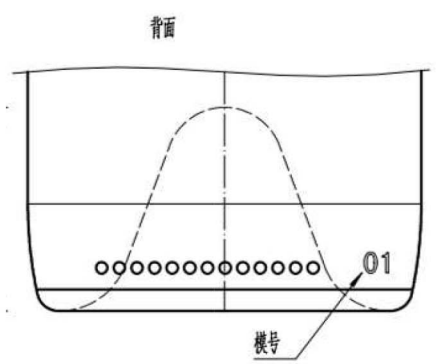

cyglassbottle.com